Building Inspection Division
Lakeland
THESE PLANS HAVE BEEN REVIEWED FOR COMPLIANCE WITH THE CURRENT EDITION OF THE FLORIDA BUILDING CODE
Date: 11/15/19
Permit Number: BLD19-06035

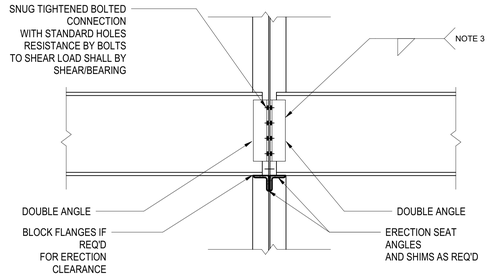

NOTE:
1. REFER TO PLAN FOR CONNECTION DESIGN REACTIONS. IF DESIGN REACTIONS ARE NOT SHOWN IN PLAN, CONNECTION SHALL DEVELOP ONE HALF OF THE ALLOWABLE UNIFORM LOAD AS SHOWN IN THE AISC TABLE OF ALLOWABLE UNIFORM LOAD.

2. PROVIDE PRE-DESIGNED CONNECTIONS AS SHOWN IN AISC MANUAL WHERE APPLICABLE.

3. SHOP WELD ON THREE SIDES TO DEVELOP BEAM REACTION, TYPICAL.

TYPICAL SHEAR CONNECTION AT COLUMN WEB

C1 DETAIL
S6-1-01 SCALE:NOT TO SCALE

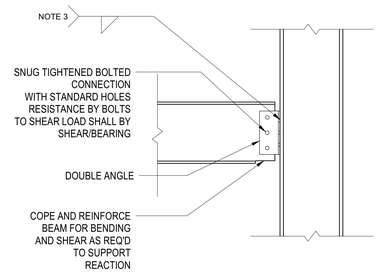

NOTE:
1. REFER TO PLAN FOR CONNECTION DESIGN REACTIONS. IF DESIGN REACTIONS ARE NOT SHOWN IN PLAN, CONNECTION SHALL DEVELOP ONE HALF OF THE ALLOWABLE UNIFORM LOAD AS SHOWN IN THE AISC TABLE OF ALLOWABLE UNIFORM LOAD.

2. PROVIDE PRE-DESIGNED CONNECTIONS AS SHOWN IN AISC MANUAL WHERE APPLICABLE.

3. SHOP WELDED CONNECTION TO DEVELOP BEAM REACTION (2 x WELD SIZE RETURN AT TOP).

TYPICAL SHEAR CONNECTION AT COLUMN FLANGE

C2 DETAIL
S6-1-01 SCALE:NOT TO SCALE

MINIMUM FLOOR DECK PROPERTIES:
1. GALVANIZED = G90
2. THICKNESS = 16 GAGE
3. SECTION MODULUS
Sn= 0.551 IN^3/FT
4. MOMENT OF INERTIA
I= 0.920 IN /FT

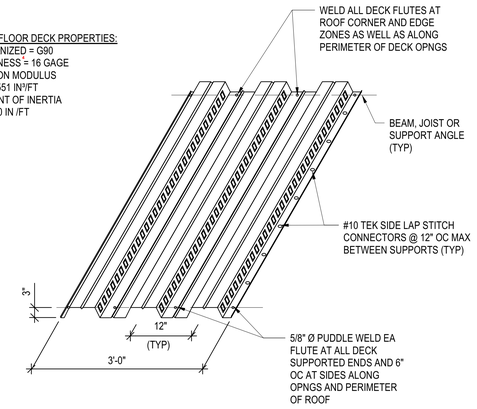

3VLI (20 GA) COMPOSITE ROOF DECK

C3 COMPOSTIE FLOOR METAL DECK ISO
S6-1-01 SCALE:NOT TO SCALE

MINIMUM ROOF DECK PROPERTIES:
1. GALVANIZED = G90
2. THICKNESS = 18 GAGE
3. SECTION MODULUS
Sp= 0.324 IN^3/FT
Sn= 0.311 IN^3/FT
4. MOMENT OF INERTIA
Ip= 0.295 IN /FT^4
In= 0.272 IN /FT^4

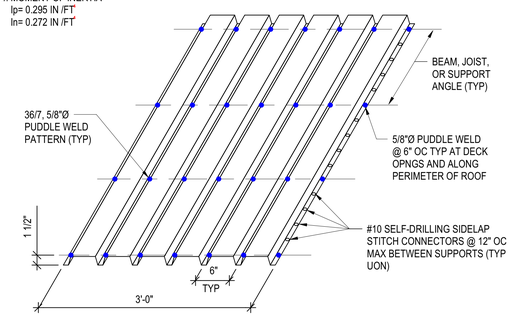

WELD ALL DECK FLUTES AT ROOF CORNER AND EDGE ZONES AS WELL AS ALONG PERIMETER OF DECK OPNGS

TYPE 1.5C (18 GA) WIDE RIB ROOF DECK

C4 ROOF METAL DECK ISO
S6-1-01 SCALE:NOT TO SCALE

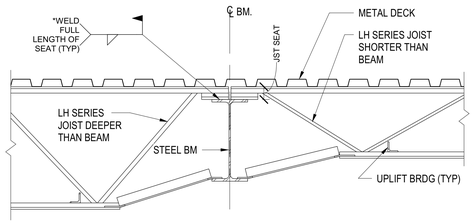

NOTES:

1. STAGGER JOISTS WHERE INDICATED IN PLAN OR AS REQ'D TO OBTAIN 2 1/2" (MIN) BEARING ON STEEL SUPPORTS. COOR'D AS REQ'D.

2. JOISTS/ROOF SLOPE IS NOT SHOWN FOR CLARITY. REF ROOF FRMG PLAN FOR SLOPES AS APPLICABLE. PROVIDE FLAT AND LEVEL BEARING SEATS AT ALL SLOPING ROOF JOISTS IN ORDER TO OBTAIN FULL CONTACT W/ SUPPORTING MEMBERS.

3. *BOLT JOISTS AS REQ'D FOR COLUMN STABILITY AND WHERE INDICATED IN PLAN.

TYP K-SERIES ROOF JOIST FRMG @ STEEL BEAM

B1 DETAIL
S6-1-01 SCALE:NOT TO SCALE

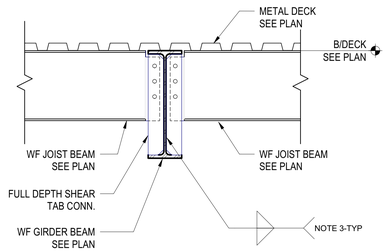

NOTE:
1. REFER TO PLAN FOR CONNECTION DESIGN REACTIONS. IF DESIGN REACTIONS ARE NOT SHOWN IN PLAN, CONNECTION SHALL DEVELOP ONE HALF OF THE ALLOWABLE UNIFORM LOAD AS SHOWN IN THE AISC TABLE OF ALLOWABLE UNIFORM LOAD.

2. PROVIDE PRE-DESIGNED CONNECTIONS AS SHOWN IN AISC MANUAL WHERE APPLICABLE.

3. SHOP WELD ON SHEAR THREE SIDES TO DEVELOP BEAM REACTION, TYPICAL.

4. COPE AND REINFORCE BEAM FOR BENDING AND SHEAR AS REQ'D TO SUPPORT REACTION.

TYPICAL JOIST BEAM TO GIRDER BEAM SHEAR CONNECTION

B2 JOIST BM. TO GIRDER BM. CONN
S6-1-01 SCALE:NOT TO SCALE

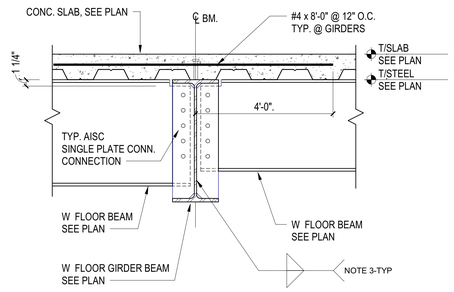

NOTE:
1. REFER TO PLAN FOR CONNECTION DESIGN REACTIONS. IF DESIGN REACTIONS ARE NOT SHOWN IN PLAN, CONNECTION SHALL DEVELOP ONE HALF OF THE ALLOWABLE UNIFORM LOAD AS SHOWN IN THE AISC TABLE OF ALLOWABLE UNIFORM LOAD.

2. PROVIDE PRE-DESIGNED CONNECTIONS AS SHOWN IN AISC MANUAL WHERE APPLICABLE.

3. SHOP WELD ON SHEAR THREE SIDES TO DEVELOP BEAM REACTION, TYPICAL.

4. COPE AND REINFORCE BEAM FOR BENDING AND SHEAR AS REQ'D TO SUPPORT REACTION.

TYPICAL BEAM TO GIRDER BEAM SHEAR CONNECTION @ COMPOSITE SLAB

B3 FLOOR BM. TO GIRDER BM. CONN.
S6-1-01 SCALE:NOT TO SCALE

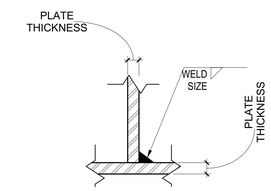

MINIMUM WELD PLATE TO PLATE	
MIN PLATE THICKNESS	WELD SIZE (in)
≤ 1/4"	1/8
≤ 1/2"	3/16
≤ 3/4"	1/4
> 3/4"	5/16

B4 MINIMUM STEEL WELD SIZES
S6-1-01 SCALE:NOT TO SCALE

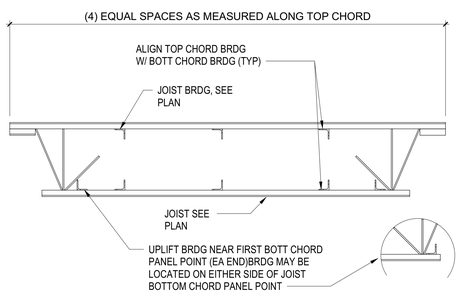

NOTE:
SAMPLE LAYOUT SHOWN FOR (3) ROWS @ TOP CHORD & 5 ROWS @ BOTT CHORD SEE PLAN FOR ACTUAL QUANTITIES

TYPICAL MINIMUM JOIST BRIDGING DETAIL

A1 DETAIL
S6-1-01 SCALE:NOT TO SCALE

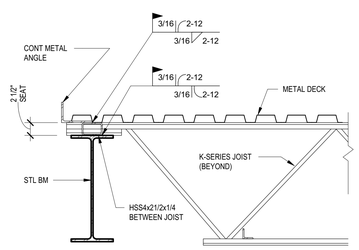

TYP DECK ATTACHMENT BETWEEN K-SERIES JOISTS BEARING ON STEEL BEAMS

A2 DETAIL
S6-1-01 SCALE:NOT TO SCALE

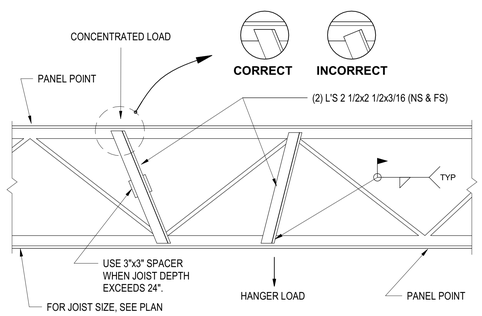

ADD JOIST REINFORCING ANGLES FOR CONCENTRATED LOADS WHICH EXCEED 150 LB AND DO NOT FALL AT A PANEL POINT.

TYP JOIST REINFORCEMENT @ CONCENTRATED LOADS

A3 DETAIL
S6-1-01 SCALE:NOT TO SCALE

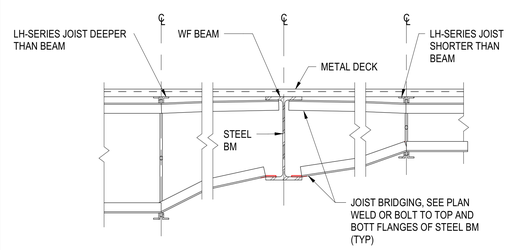

TYP ROOF JOIST BRIDGING @ STEEL BEAM

A4 DETAIL
S6-1-01 SCALE: 1" = 1'-0"

This drawing has been prepared for the use of AECOM's client and may not be used, reproduced or relied upon by third parties, except as agreed by AECOM and its client, as required by law or for use by governmental reviewing agencies. AECOM accepts no responsibility, and denies any liability whatsoever to any party that modifies this drawing without AECOM's express written consent. Do not scale this document. All measurements must be obtained from the stated dimensions.

AECOM
BATSON-COOK CONSTRUCTION

PROJECT
PUBLIX HEADQUARTERS BUILDING ADDITION AND PARKING LOT EXPANSION
3300 PUBLIX CORPORATE PARKWAY
LAKELAND, FL 33811

CLIENT
Publix
3300 PUBLIX CORPORATE PARKWAY
LAKELAND, FL 33811
www.publix.com

CONSULTANT
AECOM
AECOM TECHNICAL SERVICES, INC.
800 Douglas Entrance
North Tower, 2nd Floor
Coral Gables, FL 33134
305.444.4691 tel 305.447.3580 fax
www.aecom.com

ARCHITECTURE
LICENSE NO. AA26000687

ENGINEERING
CA LIC. NO. 8115

http://www.aecom.com

REGISTRATION
VINCENT RAJ VACCARELLO-WADEHRA, PROFESSIONAL ENGINEER, STATE OF FLORIDA, LICENSE NO. 81224

THIS ITEM HAS BEEN DIGITALLY SIGNED AND SEALED BY VINCENT RAJ VACCARELLO-WADEHRA, PROFESSIONAL ENGINEER, STATE OF FLORIDA, LICENSE NO. 81224 ON THE DATE INDICATED HERE. PRINTED COPIES OF THIS DOCUMENT ARE NOT CONSIDERED SIGNED AND SEALED AND THE SIGNATURE MUST BE VERIFIED ON ANY ELECTRONIC COPIES.

Vincent R Vaccarello -Wadehra
Digitally signed by Vincent R Vaccarello-Wadehra
Date: 2019.08.22 18:02:35 -04'00'

NOTICE: THE OFFICIAL RECORD OF THIS SHEET IS THE ELECTRONIC FILE SIGNED AND SEALED UNDER RULE 61G15-23.004, F.A.C.

ISSUE/REVISION

I/R	DATE	DESCRIPTION
0	AUGUST 23, 2019	CONSTRUCTION DOCUMENTS
	AUGUST 16, 2019	90% CONSTRUCTION DOCUMENTS
	JUNE 27, 2019	STEEL DESIGN PACKAGE

PROJECT NUMBER
60601397

SHEET TITLE
STRUCTURAL FRAMING DETAILS

SHEET NUMBER
S6-1-01

©2016 AECOM Corporation

Project Management Initials: Designer: Designer Checker: Checker Approved: Approver/RCH E1 30"x42"
Last Plotted: 8/22/2019 5:39:39 PM
Filename: BIM 360:\60601397-Publix HQ\60601397_Publix HQ_STRUCT_R2019.rvt
Printed on ___% Post-Consumer Recycled Content Paper